Makita Circular Saw 190mm 5703R

A versatile and compact circular saw with riving knife and a powerful motor. Suitable for carrying out tasks for joinery, shopfitting and construction work by providing fast and effective cuts into timber, plywood, MDF and blockboard. Can be connected to a dust extraction system for neat and clean working.

User Benefits

- Powerful motor
- Heavy duty base plate
- Dust extraction facility can be attached
- Quick release height adjustment
- Ideal for most general timber cutting tasks

Machine Specifications	
Blade Diameter	190 mm
Max. Cutting Depth at 45°	46 mm
Max. Cutting Depth at 90°	66 mm
Voltage	110 V
No Load Speed (min-1)	4800
Overall Length	356 mm
Net Weight	5.7 kg

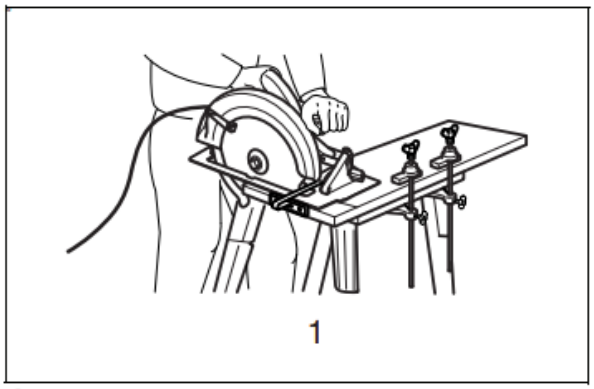

1 000157

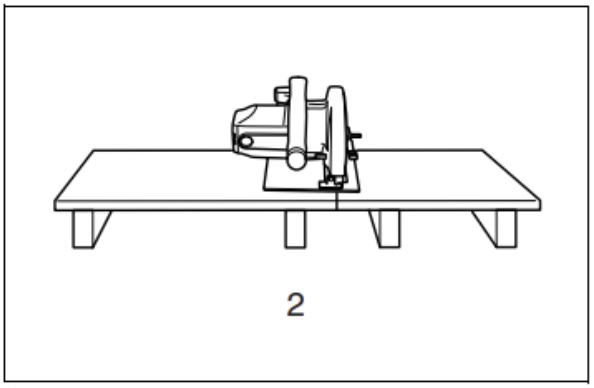

2 000154

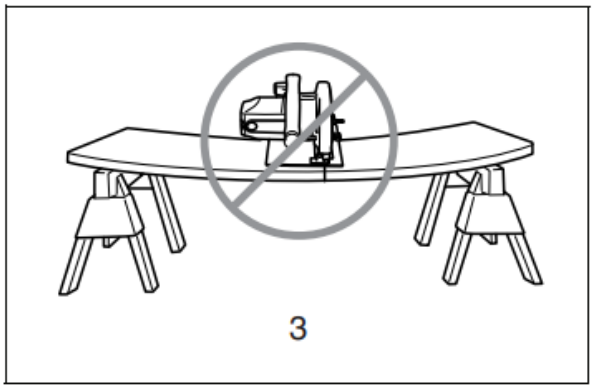

3 000156

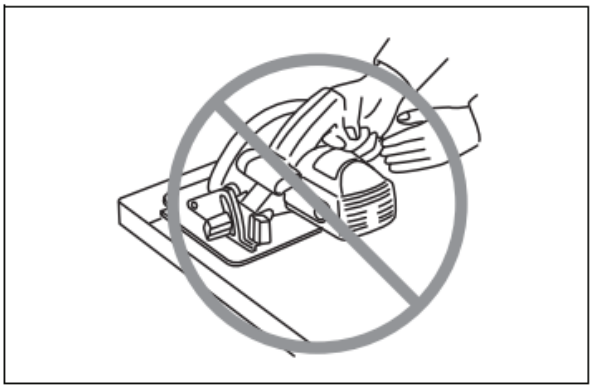

4 000194

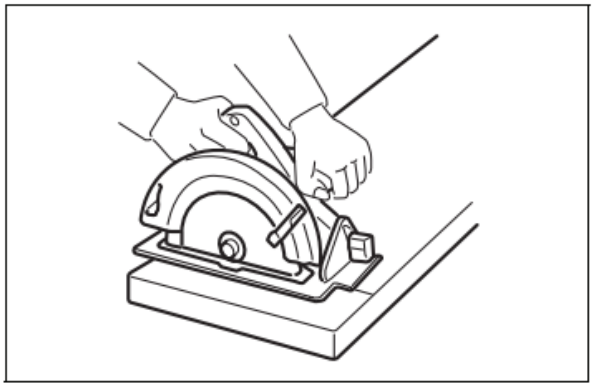

5 000147

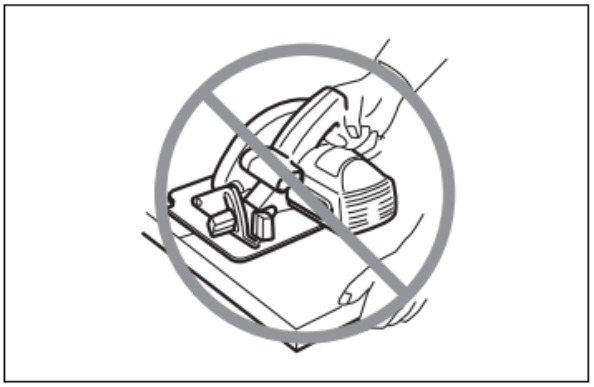

6 000150

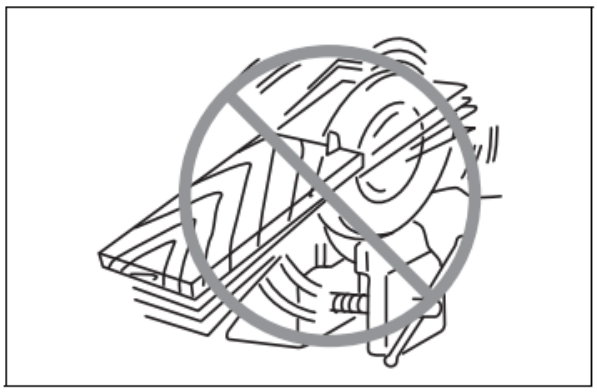

7 000029

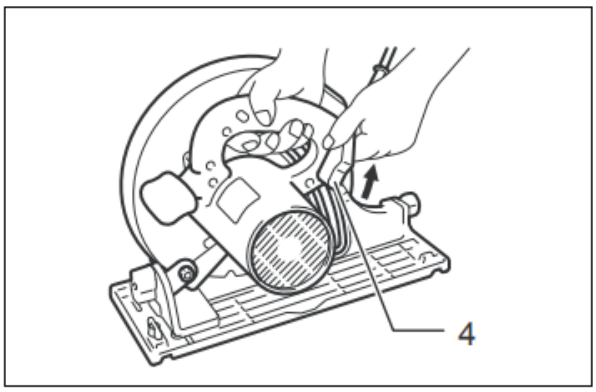

8 005392

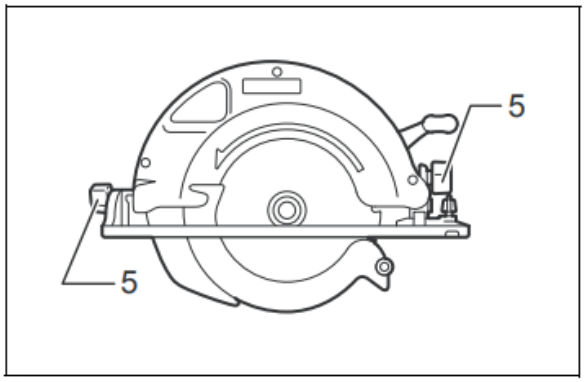

9 005393

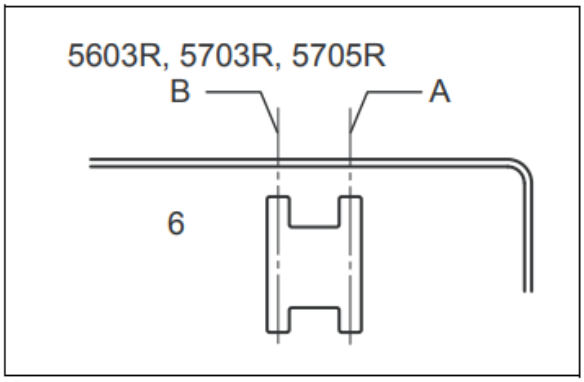

10 005394

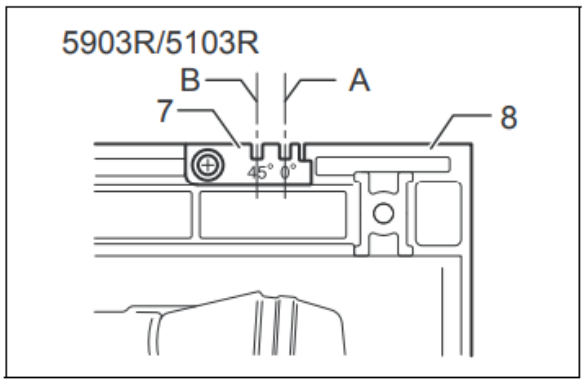

11 005449

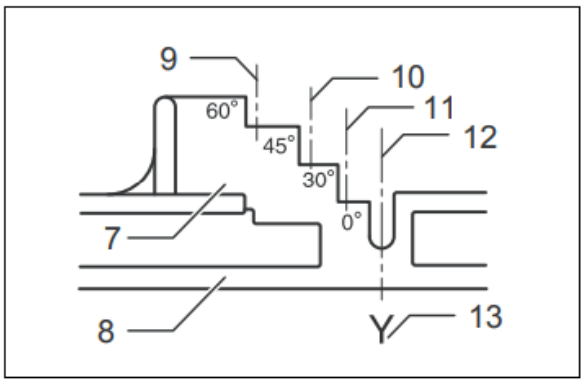

12 005396

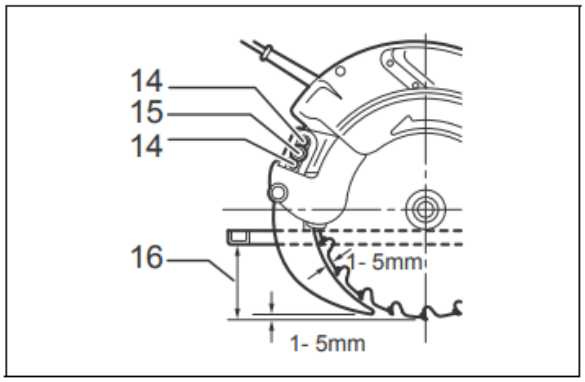

13 005397

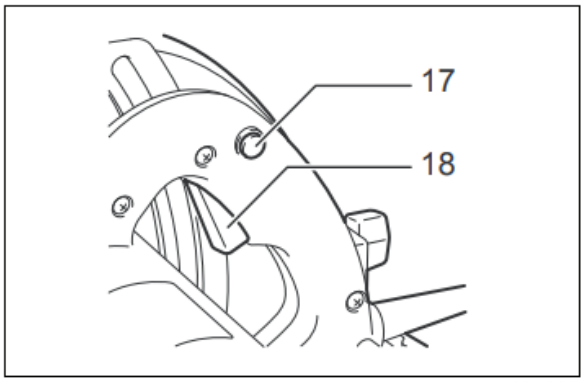

14 005398

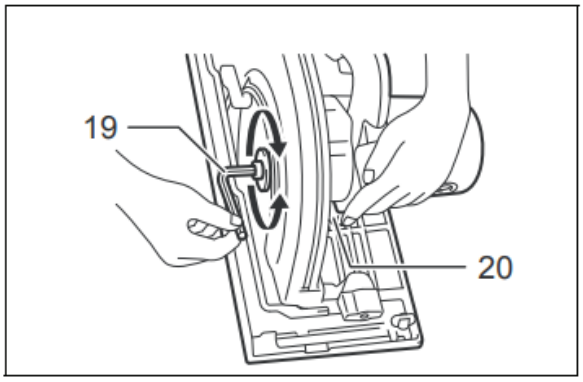

15 005399

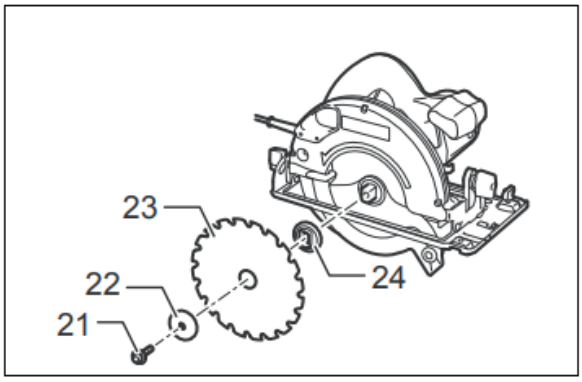

16 005400

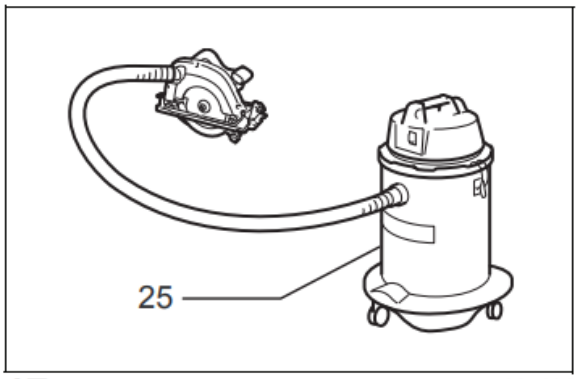

17 005414

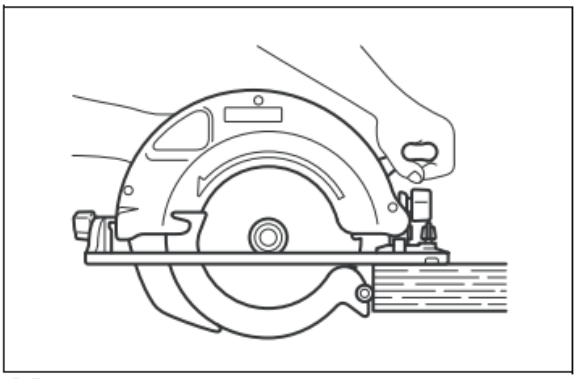

18 005401

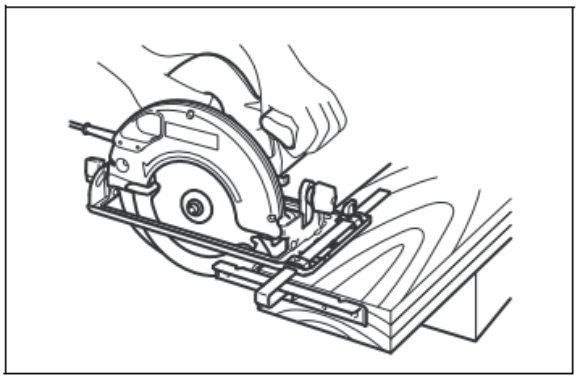

19 005402

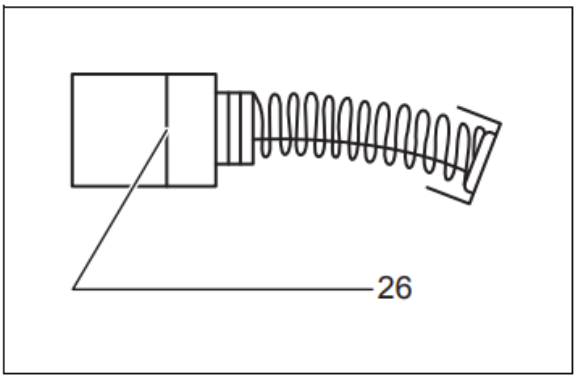

20 001145

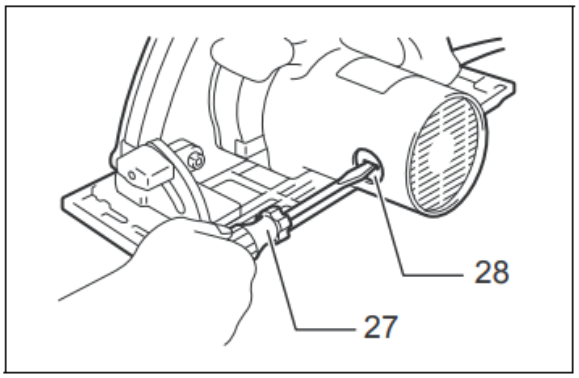

21 005403

ENGLISH (Original instructions)

Explanation of general view

1 A typical illustration of proper hand support, workpiece support, and supply cord routing (if applicable).
2 To avoid kickback, do support board or panel near the cut.
3 Do not support board or panel away from the cut.
4 Lever
5 Clamping screw
6 Base plate
7 Top guide
8 Base
9 60° angle cuts
10 45° angle cuts
11 30° angle cuts
12 Straight cuts
13 Blade
14 Setting protuberances
15 Hex socket head bolt (For adjusting riving knife)
16 Cutting depth
17 Lock-off button
18 Switch trigger
19 Hex wrench
20 Shaft lock
21 Hex socket head bolt
22 Outer flange
23 Saw blade
24 Inner flange
25 Vacuum cleaner
26 Limit mark
27 Screwdriver
28 Brush holder cap

- Due to our continuing program of research and development, the specifications herein are subject to change without notice.
- Specifications may differ from country to country.
- Weight according to EPTA-Procedure 01/2003

ENE078-2

Intended use

The tool is intended for performing lengthways and crossways straight cuts and miter cuts with angles in wood while in firm contact with the workpiece. With appropriate Makita genuine saw blades, other materials can also be sawed.

ENF002-2

Power supply

The tool should be connected only to a power supply of the same voltage as indicated on the nameplate, and can only be operated on single-phase AC supply. They are double-insulated and can, therefore, also be used from sockets without earth wire.

GEA010-1

General Power Tool Safety Warnings

⚠ **WARNING Read all safety warnings and all instructions.** Failure to follow the warnings and instructions may result in electric shock, fire and/or serious injury.

Save all warnings and instructions for future reference.

GEB029-5

CIRCULAR SAW SAFETY WARNINGS

Cutting procedures

1. ⚠ **DANGER: Keep hands away from cutting area and the blade. Keep your second hand on auxiliary handle, or motor housing.** If both hands are holding the saw, they cannot be cut by the blade.
2. **Do not reach underneath the workpiece.** The guard cannot protect you from the blade below the workpiece.
3. **Adjust the cutting depth to the thickness of the workpiece.** Less than a full tooth of the blade teeth should be visible below the workpiece.
4. **Never hold piece being cut in your hands or across your leg. Secure the workpiece to a stable platform.** It is important to support the work properly to minimize body exposure, blade binding, or loss of control. **(Fig. 1)**
5. **Hold the power tool by insulated gripping surfaces only, when performing an operation where the cutting tool may contact hidden wiring or its own cord.** Contact with a "live" wire will also make exposed metal parts of the power tool "live" and could give the operator an electric shock.
6. **When ripping, always use a rip fence or straight edge guide.** This improves the accuracy of cut and reduces the chance of blade binding.
7. **Always use blades with correct size and shape (diamond versus round) of arbor holes.** Blades that do not match the mounting hardware of the saw will run eccentrically, causing loss of control.

8. **Never use damaged or incorrect blade washers or bolt.** The blade washers and bolt were specially designed for your saw, for optimum performance and safety of operation.

Kickback causes and related warnings

– kickback is a sudden reaction to a pinched, bound or misaligned saw blade, causing an uncontrolled saw to lift up and out of the workpiece toward the operator;
– when the blade is pinched or bound tightly by the kerf closing down, the blade stalls and the motor reaction drives the unit rapidly back toward the operator;
– if the blade becomes twisted or misaligned in the cut, the teeth at the back edge of the blade can dig into the top surface of the wood causing the blade to climb out of the kerf and jump back toward the operator.

Kickback is the result of saw misuse and/or incorrect operating procedures or conditions and can be avoided by taking proper precautions as given below.

9. **Maintain a firm grip with both hands on the saw and position your arms to resist kickback forces. Position your body to either side of the blade, but not in line with the blade.** Kickback could cause the saw to jump backwards, but kickback forces can be controlled by the operator, if proper precautions are taken.
10. **When blade is binding, or when interrupting a cut for any reason, release the trigger and hold the saw motionless in the material until the blade comes to a complete stop. Never attempt to remove the saw from the work or pull the saw backward while the blade is in motion or kickback may occur.** Investigate and take corrective actions to eliminate the cause of blade binding.
11. **When restarting a saw in the workpiece, centre the saw blade in the kerf and check that saw teeth are not engaged into the material.** If saw blade is binding, it may walk up or kickback from the workpiece as the saw is restarted.
12. **Support large panels to minimize the risk of blade pinching and kickback.** Large panels tend to sag under their own weight. Supports must be placed under the panel on both sides, near the line of cut and near the edge of the panel. **(Fig. 2 & 3)**
13. **Do not use dull or damaged blades.** Unsharpened or improperly set blades produce narrow kerf causing excessive friction, blade binding and kickback.
14. **Blade depth and bevel adjusting locking levers must be tight and secure before making cut.** If blade adjustment shifts while cutting, it may cause binding and kickback.
15. **Use extra caution when sawing into existing walls or other blind areas.** The protruding blade may cut objects that can cause kickback.
16. **ALWAYS hold the tool firmly with both hands. NEVER place your hand or fingers behind the saw.** If kickback occurs, the saw could easily jump backwards over your hand, leading to serious personal injury. **(Fig. 4)**
17. **Never force the saw. Push the saw forward at a speed so that the blade cuts without slowing.** Forcing the saw can cause uneven cuts, loss of accuracy, and possible kickback.

Lower guard function

18. **Check lower guard for proper closing before each use. Do not operate the saw if lower guard does not move freely and close instantly. Never clamp or tie the lower guard into the open position.** If saw is accidentally dropped, lower guard may be bent. Raise the lower guard with the retracting handle and make sure it moves freely and does not touch the blade or any other part, in all angles and depths of cut.
19. **Check the operation of the lower guard spring. If the guard and the spring are not operating properly, they must be serviced before use.** Lower guard may operate sluggishly due to damaged parts, gummy deposits, or a build-up of debris.
20. **Lower guard may be retracted manually only for special cuts such as "plunge cuts" and "compound cuts". Raise lower guard by retracting handle and as soon as blade enters the material, the lower guard must be released.** For all other sawing, the lower guard should operate automatically.
21. **Always observe that the lower guard is covering the blade before placing saw down on bench or floor.** An unprotected, coasting blade will cause the saw to walk backwards, cutting whatever is in its path. Be aware of the time it takes for the blade to stop after switch is released.
22. **To check lower guard, open lower guard by hand, then release and watch guard closure. Also check to see that retracting handle does not touch tool housing.** Leaving blade exposed is VERY DANGEROUS and can lead to serious personal injury.

Riving knife function

23. **Use the appropriate saw blade for the riving knife.** For the riving knife to function, the body of the blade must be thinner than the riving knife and the cutting width of the blade must be wider than the thickness of the riving knife.
24. **Adjust the riving knife as described in this instruction manual.** Incorrect spacing, positioning and alignment can make the riving knife ineffective in preventing kickback.
25. **Always use the riving knife except when plunge cutting.** Riving knife must be replaced after plunge cutting. Riving knife causes interference during plunge cutting and can create kickback.
26. **For the riving knife to work, it must be engaged in the workpiece.** The riving knife is ineffective in preventing kickback during short cuts.
27. **Do not operate the saw if riving knife is bent.** Even a light interference can slow the closing rate of a guard.

Additional safety warnings

28. **Use extra caution when cutting damp wood, pressure treated lumber, or wood containing knots.** Maintain smooth advancement of tool without decrease in blade speed to avoid overheating the blade tips.
29. **Do not attempt to remove cut material when blade is moving. Wait until blade stops before grasping cut material.** Blades coast after turn off.

30. **Avoid cutting Nails. Inspect for and remove all nails from lumber before cutting.**
31. **Place the wider portion of the saw base on that part of the workpiece which is solidly supported, not on the section that will fall off when the cut is made. As examples, Fig. 5 illustrates the RIGHT way to cut off the end of a board, and Fig. 6 the WRONG way. If the workpiece is short or small, clamp it down. DO NOT TRY TO HOLD SHORT PIECES BY HAND! (Fig. 5 & 6)**
32. **Before setting the tool down after completing a cut, be sure that the lower guard has closed and the blade has come to a complete stop.**
33. **Never attempt to saw with the circular saw held upside down in a vise. This is extremely dangerous and can lead to serious accidents. (Fig. 7)**
34. **Some material contains chemicals which may be toxic. Take caution to prevent dust inhalation and skin contact. Follow material supplier safety data.**
35. **Do not stop the blades by lateral pressure on the saw blade.**
36. **Always use blades recommended in this manual. Do not use any abrasive wheels.**
37. **Keep blade sharp and clean.** Gum and wood pitch hardened on blades slows saw and increases potential for kickback. Keep blade clean by first removing it from tool, then cleaning it with gum and pitch remover, hot water or kerosene. Never use gasoline.
38. **Wear a dust mask and hearing protection when use the tool.**

SAVE THESE INSTRUCTIONS.

WARNING:
DO NOT let comfort or familiarity with product (gained from repeated use) replace strict adherence to safety rules for the subject product. MISUSE or failure to follow the safety rules stated in this instruction manual may cause serious personal injury.

FUNCTIONAL DESCRIPTION

CAUTION:
- Always be sure that the tool is switched off and unplugged before adjusting or checking function on the tool.

Adjusting depth of cut (Fig. 8)

CAUTION:
- After adjusting the depth of cut, always tighten the lever securely.

Loosen the lever on the depth guide and move the base up or down. At the desired depth of cut, secure the base by tightening the lever.
For cleaner, safer cuts, set cut depth so that no more than one blade tooth projects below workpiece. Using proper cut depth helps to reduce potential for dangerous KICKBACKS which can cause personal injury.

Bevel cutting (Fig. 9)

For model 5603R, 5703R, 5705R, 5903R, 5103R
Loosen the clamping screws in front and back, and tilt the tool to the desired angle for bevel cuts (0° – 45°). Secure the clamping screws tightly in front and back after making the adjustment.

For model 5143R
Loosen the clamping screw in front and tilt the tool to the desired angle for bevel cuts (0° – 60°). Secure the clamping screw tightly in front after making the adjustment.

Sighting

For 5603R, 5703R, 5705R, 5903R, 5103R (Fig. 10 & 11)
For straight cuts, align the A position on the front of the base with your cutting line. For 45° bevel cuts, align the B position with it.

For 5143R (Fig. 12)
Align your sight line with either the 0° notch for straight cutting or the 30° notch for 30° angle cuts or the 45° notch for 45° angle cuts or the 60° notch for 60° angle cuts.

Riving knife adjustment (Fig. 13)

Use the hex wrench to loosen the hex socket head bolt for the riving knife adjustment, then raise the lower blade guard. Move the riving knife up or down over the two protuberances for settings indicated in the figure, so as to obtain the proper clearance between the riving knife and saw blade.

CAUTION:
- Ensure that the riving knife is adjusted such that:
  The distance between the riving knife and the toothed rim of the saw blade is not more than 5 mm. The toothed rim does not extend more than 5 mm beyond the lower edge of the riving knife.

Switch action (Fig. 14)

CAUTION:
- Before plugging in the tool, always check to see that the switch trigger actuates properly and returns to the "OFF" position when released.

To prevent the switch trigger from being accidentally pulled, a lock-off button is provided. To start the tool, push in the lock-off button and pull the switch trigger. Release the switch trigger to stop.

ASSEMBLY

CAUTION:
- Always be sure that the tool is switched off and unplugged before carrying out any work on the tool.

Removing or installing saw blade (Fig. 15 & 16)

The following blade can be used with this tool.

Model	Max. dia.	Min. dia.	Blade thickness	Kerf
5603R	165 mm	150 mm	1.6 mm or less	1.9 mm or more
5703R, 5705R	190 mm	170 mm	1.6 mm or less	1.9 mm or more
5903R	235 mm	210 mm	1.7 mm or less	2.1 mm or more
5103R	270 mm	260 mm	1.8 mm or less	2.2 mm or more
5143R	355 mm	350 mm	2.3 mm or less	2.7 mm or more

006481

The thickness of the riving knife is 1.8 mm for Models 5603R, 5703R and 5705R or 2.0 mm for Models for 5903R and 5103R or 2.5 mm for Model 5143R.

CAUTION:
- Do not use saw blades which do not comply with the characteristics specified in these instructions.
- Do not use saw blades the disc of which is thicker or the set of which is smaller than the thickness of the riving knife.

CAUTION:
- Be sure the blade is installed with teeth pointing up at the front of the tool.
- Use only the Makita wrench to install or remove the blade.
- Never depress the shaft lock while the saw is running.

To remove the blade, press the shaft lock fully so that the blade cannot revolve and use the hex wrench to loosen the hex bolt counterclockwise. Then remove the hex bolt, outer flange and blade.
To install the blade, follow the removal procedure in reverse. BE SURE TO TIGHTEN THE HEX BOLT CLOCKWISE SECURELY.

When changing blade, make sure to also clean upper and lower blade guards of accumulated sawdust. Such efforts do not, however, replace the need to check lower guard operation before each use.

Connecting a vacuum cleaner (Fig. 17)
When you wish to perform clean cutting operation, connect a Makita vacuum cleaner to your tool. Install the joint on the tool using the screws. Then connect a hose of the vacuum cleaner to the joint as shown in the figure.

OPERATION

CAUTION:
- Be sure to move the tool forward in a straight line gently. Forcing or twisting the tool will result in overheating the motor and dangerous kickback, possibly causing severe injury.

Hold the tool firmly. The tool is provided with both a front grip and rear handle. Use both to best grasp the tool. If both hands are holding saw, they cannot be cut by the blade. Set the base on the workpiece to be cut without the blade making any contact. Then turn the tool on and wait until the blade attains full speed. Now simply move the tool forward over the workpiece surface, keeping it flat and advancing smoothly until the sawing is completed.
To get clean cuts, keep your sawing line straight and your speed of advance uniform. If the cut fails to properly follow your intended cut line, do not attempt to turn or force the tool back to the cut line. Doing so may bind the blade and lead to dangerous kickback and possible serious injury. Release switch, wait for blade to stop and then withdraw tool. Realign tool on a new cut line, and start cut again. Attempt to avoid positioning which exposes operator to chips and wood dust being ejected from saw. Use eye protection to help avoid injury. **(Fig. 18)**

CAUTION:
- The riving knife should always be used except when plunging in the middle of the workpiece.

Rip fence (Guide rule) (Fig. 19)
The handy rip fence allows you to do extra-accurate straight cuts. Simply slide the rip fence up snugly against the side of the workpiece and secure it in position with the screw on the front of the base. It also makes repeated cuts of uniform width possible.

MAINTENANCE

CAUTION:
- Always be sure that the tool is switched off and unplugged before attempting to perform inspection or maintenance.
- Never use gasoline, benzine, thinner, alcohol or the like. Discoloration, deformation or cracks may result.

Replacing carbon brushes (Fig. 20 & 21)
Remove and check the carbon brushes regularly. Replace when they wear down to the limit mark. Keep the carbon brushes clean and free to slip in the holders. Both carbon brushes should be replaced at the same time. Use only identical carbon brushes.
Use a screwdriver to remove the brush holder caps. Take out the worn carbon brushes, insert the new ones and secure the brush holder caps.

To maintain product SAFETY and RELIABILITY, repairs, any other maintenance or adjustment should be performed by Makita Authorized Service Centers, always using Makita replacement parts.

OPTIONAL ACCESSORIES

CAUTION:
- These accessories or attachments are recommended for use with your Makita tool specified in this manual. The use of any other accessories or attachments might present a risk of injury to persons. Only use accessory or attachment for its stated purpose.

If you need any assistance for more details regarding these accessories, ask your local Makita Service Center.

- Saw blades
- Rip fence (Guide rule)
- Hex wrench
- Joint

NOTE:
- Some items in the list may be included in the tool package as standard accessories. They may differ from country to country.

ENG905-1

Noise

The typical A-weighted noise level determined according to EN60745:

Model 5603R, 5703R
Sound pressure level (L_{pA}): 93 dB (A)
Sound power level (L_{WA}): 104 dB (A)
Uncertainty (K): 3 dB (A)

Model 5705R, 5143R
Sound pressure level (L_{pA}): 94 dB (A)
Sound power level (L_{WA}): 105 dB (A)
Uncertainty (K): 3 dB (A)

Model 5903R
Sound pressure level (L_{pA}): 95 dB (A)
Sound power level (L_{WA}): 106 dB (A)
Uncertainty (K): 3 dB (A)

Model 5103R
Sound pressure level (L_{pA}): 97 dB (A)
Sound power level (L_{WA}): 108 dB (A)
Uncertainty (K): 3 dB (A)

Wear ear protection

ENG900-1

Vibration

The vibration total value (tri-axial vector sum) determined according to EN60745:

Model 5603R
Work mode: cutting wood
Vibration emission ($a_{h,W}$): 2.5 m/s^2 or less
Uncertainty (K): 1.5 m/s^2

Model 5103R, 5143R
Work mode: cutting wood
Vibration emission ($a_{h,W}$): 2.5 m/s^2 or less
Uncertainty (K): 1.5 m/s^2

Work mode: cutting metal
Vibration emission ($a_{h,M}$): 2.5 m/s^2 or less
Uncertainty (K): 1.5 m/s^2

Model 5703R
Work mode: cutting wood
Vibration emission ($a_{h,W}$): 3.5 m/s^2
Uncertainty (K): 1.5 m/s^2

Model 5903R
Work mode: cutting wood
Vibration emission ($a_{h,W}$): 3.0 m/s^2
Uncertainty (K): 1.5 m/s^2

Work mode: cutting metal
Vibration emission ($a_{h,M}$): 4.0 m/s^2
Uncertainty (K): 1.5 m/s^2

Model 5705R
Work mode: cutting wood
Vibration emission ($a_{h,W}$): 2.5 m/s^2
Uncertainty (K): 1.5 m/s^2

ENG901-1

- The declared vibration emission value has been measured in accordance with the standard test method and may be used for comparing one tool with another.
- The declared vibration emission value may also be used in a preliminary assessment of exposure.

WARNING:

- The vibration emission during actual use of the power tool can differ from the declared emission value depending on the ways in which the tool is used.
- Be sure to identify safety measures to protect the operator that are based on an estimation of exposure in the actual conditions of use (taking account of all parts of the operating cycle such as the times when the tool is switched off and when it is running idle in addition to the trigger time).

ENH101-16

For European countries only

EC Declaration of Conformity

We Makita Corporation as the responsible manufacturer declare that the following Makita machine(s):
Designation of Machine: Circular Saw
Model No./ Type:
5603R, 5703R, 5705R, 5903R, 5103R, 5143R
are of series production and
Conforms to the following European Directives:
2006/42/EC
And are manufactured in accordance with the following standards or standardised documents:
EN60745
The technical documentation is kept by:
Makita International Europe Ltd.
Technical Department,
Michigan Drive, Tongwell,
Milton Keynes, Bucks MK15 8JD, England

30.1.2009

Tomoyasu Kato
Director
Makita Corporation
3-11-8, Sumiyoshi-cho,
Anjo, Aichi, 446-8502, JAPAN