BUILDERS GANTRY HOIST

ET 300

(1140950 - 1140951)

Dear Client
Congratulations on choosing the IMER winch, the reliable and innovative result of years of experience.

WORKING IN SAFETY
To work in complete safety, read the following instructions carefully before installing the machine.

This OPERATION AND MAINTENANCE manual must be kept on site by the person in charge, e.g. the site foreman, and must always be available for consultation.
The manual is to be considered an integral part of the machine and must be kept for future reference (EN 12100-2) until the machine is disposed of. If it is damaged or lost, a replacement copy may be requested from the manufacturer.
The manual contains important information regarding site preparation, installation, operation, maintenance, and ordering spare parts. Nevertheless, the installer and the operator must both have adequate experience and knowledge of the machine prior to use.
To guarantee the complete safety of the operator, safe operation and long life of equipment, follow the instructions in this manual carefully, and observe all safety standards currently in force for the prevention of accidents at work (use of suitable footwear and clothing, hard hats, safety harnesses, proper installation of railings around drops, etc.).

It is strictly forbidden to carry out any form of modification to the steel structure, working parts of the machine or the gantry structure.

IMER INTERNATIONAL declines all responsibility for non-compliance with laws and standards governing the use of lifting equipment, in particular; improper use, defective power supply, lack of maintenance, unauthorised modifications, tampering with or damage to part or all of the equipment, and partial or total failure to observe the instructions contained in this manual.

IMER INTERNATIONAL reserves the right to modify the characteristics of the hoist and/or the contents of this manual without any obligation to update previous machines or manuals.

1. GENERAL DESCRIPTION

ATTENTION: Use of lifting equipment requires care and skill. The machine must be operated by skilled and properly instructed personnel only.

1) The machine is designed to lift materials only and for use in building construction sites.

2) Carrying persons and/or animals is prohibited.

3) The machine must not be used in potentially explosive atmospheres or underground.

The machine consists of (fig. 1):
- frame (ref. 6) with hand brake (ref. 8).
- Drum (ref. 3) fitted to reduction gearbox shaft (ref. 11), steel rope (ref. 1) lift hook (ref. 2) and counterweight (ref. 10);
- Gearmotor consisting of an electric brake motor (ref. 4) and oil reduction gearbox (ref. 11).
- Electrical system (5) with 1 m pendant control with three pushbuttons (12)
- Up position control lever (9).
- 3-button low voltage pendant control with 25 m lead (on remote control versions), with down position control lever (13).

2. IMER HOIST SUPPORT STRUCTURE

The structure supporting the winch must withstand the loads generated during operation (Fig. 2).
IMER supplies a gantry support, as shown in fig. 8, for use on building sites and specially designed to transfer loads to the load support structure.

ATTENTION
The EC Declaration of Conformity enclosed with the present manual is only valid if only IMER components are used for the winch and gantry.

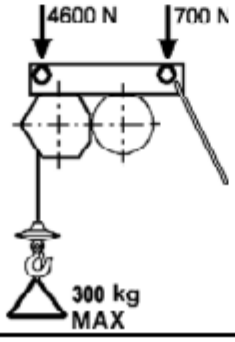

If this condition is not complied with, the Declaration is applicable to the winch only. The installation technician who fits the winch on another type of gantry support must compile a new EC Declaration of Conformity after having satisfied all the provisions of the Machinery Safety Directive 2006/42/EC and its subsequent modifications and supplements.

The forces - referred to support gantry - must be accounted for in calculations related to supporting structures (scaffolding, balconies, ceilings, etc.), made by a qualified technician.
When using supports with load capacities other than that of the winch, the permissible load capacity of the weakest element of the system must be prominently displayed.

2.1 INSTALLING THE WINCH ON SITE

The load access to the floor must be protected by a rail over 1m high and a foot stop.

- Make sure that the lifting run is free from obstacles, and ensure that nobody leans outwards on intermediate floors.
- Cordon off the ground loading area to prevent interference with work.

3. ASSEMBLY (Fig.1)

Only competent, trained personnel may assemble and operate the winch.
Given the weight of the winch, an appropriate number of personnel must be used for handling and installing it so as to avoid hazardous situations.
The maximum working height (25m) corresponds to the gearmotor position i.e. is measured from the gantry rails supporting the winch (ref. 7).
Mount the winch on the gantry support by inserting the wheels (ref. 7, fig. 1) in the rail guides (fig. 8) and release the brake (ref. 8, fig. 1).
Prevent detachment of the winch by fitting the end stop onto the rail.
Follow the rest of the instructions as described in para. 7.
All pendant controls have 3 pushbuttons (Fig. 3):
black: down
white: up
red: emergency stop.
Release the hook.

Fig. 3

4. CONNECTION TO THE MAINS

- Make sure that the mains voltage is the same as that specified on the dataplate.
- Also check that the mains voltage is within the range 210 V to 235 V, when lifting at the rated load.
- The power cable must be fitted with a magnetotermic switch and a residual current device (rcd); the earthing wire must have the same cross-section as the power cable.

Cables must be dimensioned in proportion to both the operating current and their length to avoid voltage drops (Table 1).
Do not use extension leads wound on drums.
- The power cable must be suitable for frequent handling and have an abrasion-resistant sleeve (for example H07RN-F).

Connect the machine's plug to a 16 Amp EEC socket with an IP67 protection factor and tighten up the securing collar.
- The hoist is now ready for testing.

5. TESTING

Warning! Testing must be carried out by qualified personnel. Take all necessary safety precautions.
Warning! The winch must be tested before use.
Before testing the winch make sure that it has been correctly installed.

1) Lower the unloaded rope to the lower loading position by means of the descent pushbutton, and check that at the end of its travel three turns of rope remain on the drum.
2) No-load test. Apply a small load (20 kg) and run a complete up/down cycle.
Test the up, down and emergency stop buttons on the pendant control,

ORIGINAL INSTRUCTIONS

UP limit switch operation, correct rope winding onto the drum and motor brake operation.

3) Load test. Load the winch with its maximum admissible load. Run a complete up/down cycle to test the stability of the supports, gantry and the motor brake.

After the test, check the support structure for failure and slippage and recheck the drum level.

4) The winch is fitted with a safety device which stops travel at the UP limit position (ref.9, fig.1).

Do not depend on this safety to stop the winch; release the control button to stop the winch instead.

5) On remote control versions, the down limit switch activates to shut down the winch and prevent reverse winding of the rope on the drum during descent.

IMPORTANT! Down limit switch activation can occur either due to incorrect working height or due to other problems which may prejudice correct hoist functioning. After the limit switch has been activated, the hoist installation and components must be checked (rope, drum etc.).

On direct control versions, the operator is responsible for avoiding the above risk.

On completion of testing, compile the test report with the date, installation check data and signature as well as any other comments (Tab. 2).

In case of new installations and after every service, repeat the no-load (2) and load (3) tests described above.

6. SAFETY WARNINGS AND OPERATING PRECAUTIONS

1) Do not lift weights exceeding the hoist's capacity.

2) Do not allow anyone to stand underneath suspended loads.

3) Do not attempt to raise loads that are anchored to the ground (e.g. buried posts, plinths, etc.).

4) Make sure that the load is correctly attached to the hook on the hoist and always close the safety catch (fig. 4.1, 6).

5) If the load requires the attachment of accessories (belts, ropes, slings, etc.), these must be of a certified and approved type. The maximum capacity must be reduced by the weight of these accessories.

6) Make sure that no part of the load comes detached during lifting.

7) Make sure that the load rests firmly on the ground before releasing it from the hook.

8) Do not release a suspended load using accessories that permit instantaneous release or by cutting the sling.

9) Keep hands and other parts of the body well clear of the drum during operation to avoid the risk of them getting caught in the winding rope and causing serious injury.

10) Keep hands and other parts of the body well clear of the counterweight during lifting to avoid the risk of crushing against the stop lever.

11) Do not use the machine in adverse weather conditions (strong wind or storms) as the load is not guided.

12) The control position and lighting conditions must ensure complete visibility of the load during its entire travel.

13) Check that all guards are in place.

14) During operation check that the rope winds on correctly, one turn at a time, without slack or overlay which might damage it. If not, unwind it and rewind it correctly under tension.

15) Make sure that the lifting run is free from obstacles and make sure that no one can lean out from intermediate floors.

16) Cordon off the ground loading area to prevent anyone from entering during lifting.

17) Keep children away from the hoist.

18) Do not allow unauthorised persons access to the hoist while it is not being used.

19) The hoist must not be used for pulling loads obliquely (more than 5° away from vertical).

20) Do not pull the winch on the gantry rails by means of the electric cables; use the steel handle bar on the winch frame for this purpose.

21) Do not leave a suspended load unattended. Raise or lower it and unload it.

22) When a load is to be raised or lowered, this must be done in such a way as to minimise dangerous sideways and vertical movements.

23) Do not allow the load to start to spin while it is being raised or lowered as this could cause the rope to break.

24) Before leaving the hoist unattended, remove the load, completely wind the rope onto the drum and disconnect the electric power plug.

25) On the remote control version, the pendant control cable must be secured to the building structures, in order to prevent its breaking.

When operation is resumed after a lengthy period of disuse the entire machine must be tested under no-load conditions before starting, as described above (point 2, CHAPT.5).

7. GANTRY SUPPORT: INSTALLATION AND USE (Fig. 8)

The gantry comprises two Ø 48 mm tubular supports and an NPU 65 rail on which the winch wheels slide.

The gantry features a facility for counterweight ballasts comprising two enclosures (C) with padlock closure, a base unit (D) (height 30 cm) to be fixed by means of brackets and screws, 2 connecting beams (E), damper end stop (A) and winch fixing bracket (B) with end stop.

7.1 INSTALLATION

On completion of assembly as shown in figure 8, anchor the ballasts as follows:

Position the ballast containers on the ground.

Fill the containers with sand each to at least 150 kg.

The specified ballast weights are obtained by means of specific materials whose specific density does not exceed 1300 kg/m³ (e.g. dry sand).

The use of liquids is expressly prohibited.

To avoid tampering with ballasts, the containers must be closed with lids and padlocked.

Never use makeshift systems such as bags of cement or bricks simply placed on the gantry frame as these cannot be sufficiently anchored to the frame.

- Always ensure complete efficiency of the ballasts before using the winch; check for any damage that may affect operation.

Do not fit the winch onto the gantry before fitting the ballasts.

Remove the winch from the gantry rails before disassembling the gantry and emptying the ballasts.

8. TESTING AND MAINTENANCE

Warning! Only carry out maintenance with the machine switched off, unloaded and disconnected from the mains.

Repairs must be done by qualified personnel or by IMER Technical Service.

- Use only IMER original spare parts.
- Check the motor brake every 6/7 days.
- Ensure that the notices and inscriptions on the machine are prominently displayed and legible.
- Keep the machine clean.
- Check the operation of the UP limit switch (UP and DOWN position limit switches on remote control versions) at the start of every work shift.

Check the electrical cable at the start of every work cycle for accidental damage.

Lubricate the rail guide wheels at least once a month.

8.1 STEEL ROPE

Only use new ropes as specified below, complete with certificate of conformity and identification.

External diameter	mm	5
Type	133 wires (19x7) anti-rotation	
Direction of lay	r.h.	
Strand strength	(N/mm²)	1960
Minimum breaking strain	(kN)	16,07
Length	(m)	26

Surface treatment galvanised, greased

The IMER reference code is given in the spare parts table.

8.1.1 REPLACING THE ROPE

The rope must be replaced by a qualified service technician.

Remove the hook (4) by unscrewing bolt (5) (fig. 4.1).

Remove the clamp (1), push on the wedge (2) and extract the rope from the block (3).

The drum is fitted with a device which ensures that 2 turns of rope are always wound on even when the rope is unwound to its limit. This stops the rope attachment from being over-forced.

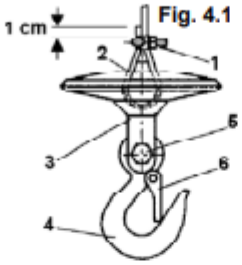

Fig. 4.1

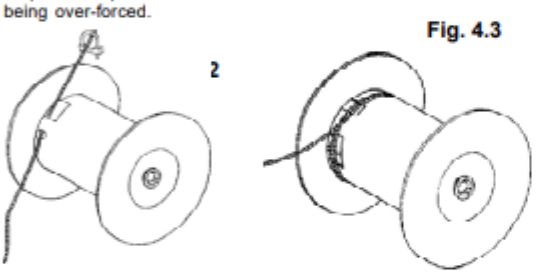

Fig. 4.3

The rope must be attached in this way. Completely unwind the rope. Remove it from inside the drum through the hole and slot. Insert the new rope in the hole and thread it through the slot in the drum tube. Tighten the clamp at the end, leaving about 1 cm of rope free (fig. 4.2), and pull the rope until the clamp comes into contact with the inner wall of the drum.

Wind on two complete turns keeping the rope in contact with the drum (Fig. 4.3).

On the second turn pass the rope under the hook inside the drum slot (Fig. 4.4).

Tension the rope for good contact with the drum surface.

Now wind on the rope in adjacent turns, one layer at a time.

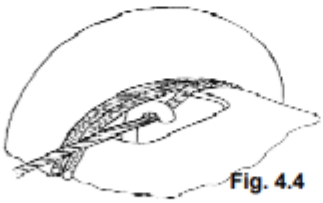
Fig. 4.4

Insert the wire rope into the counterweight and the block (Fig. 4.5).

Pass the rope back through the counterweight and the block.

Insert the wedge between the block and the rope.

Pull the rope to tighten all components. Now lock the rope with a U-clamp so that the flat part remains in contact with the lifting section of the rope. Leaving about 1 cm of rope free.

Fit the hook to the block and tighten the bolt and locknut.

Check that the UP limit switch operates when the counterweight touches the lever.

Run the load test described in paragraph 5 and note down in Table 2 the fact that the rope has been changed.

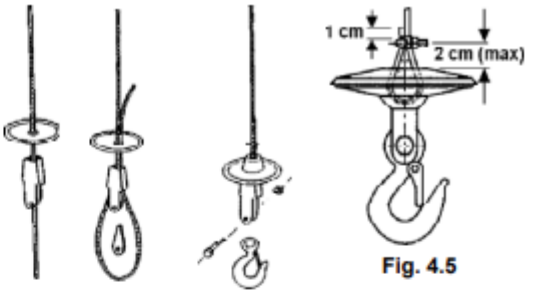

Fig. 4.5

8.1.2 PERIODIC CHECKS

⚠ **Visually check the condition of the rope every day and whenever it is subjected to abnormal strain (twisting, bending, kinks or abrasion).**

Replace the rope when defective as indicated in fig.9.

Inspect the entire rope carefully every three months and in particular the ends; note the results in the chart (Table 2) which must be kept by the site foreman.

Replace the rope at least once a year.

8.2 ADJUSTING THE MOTOR BRAKE (Fig. 5)

The brake is of the no-power engagement type.

If its braking power is reduced a qualified technician must check the device and adjust it.

⚠ **Warning!! Before servicing the brake make sure that the winch is not loaded and that the brake's power supply is disconnected.**

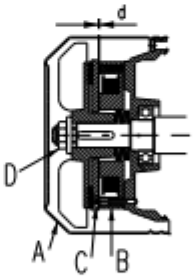

Fig. 5

Remove fan cover (A), and adjust the air gap "d" between magnet (B) and brake disk (C) by means of a feeler gauge. The gap (d) must be 0.4 mm.

Measurement should be taken at three points in order to check that the disc is perfectly parallel to the magnet. Slide the feeler gauge lightly backwards and forwards. If the air gap is too wide, reduce it by tightening nut "D" with a hex wrench. Check distance "d" several times. If the air gap is too small, increase it by unscrewing nut "D".

Once the air gap has been correctly adjusted, refit cover "A".

To check braking power, after carrying out the adjustment, repeatedly test braking action under full load conditions.

8.3 GEARBOX LUBRICATION

The gearbox unit must not develop oil leaks. Leaks may indicate damage to the aluminium casing. In this case, reseal or replace the casing.

⚠ **Check the gearbox oil level through the sight glass before every start up or long storage. Refill as required via the relative cap on the gearbox. The oil should be changed every 2000 hours. Use gear oil with ISO VG 460 viscosity at 40°C.**

⚠ **Used oil is classed as special waste. As such, it must be disposed of in accordance with established legislation.**

8.4 ELECTRICAL SYSTEM

Check the condition of the pendant control case and replace with the IMER spare part if necessary.

9. DISMANTLING

Remove all loads from the winch hook.
Wind the steel rope completely onto the drum.

⚠ **Disassemble the fixing bracket (ref. B, fig. 8) and remove the winch from the gantry guides. Carry out this operation before emptying the ballasts.**

10. TRANSPORT AND STORAGE

Do not leave the installed winch unattended without having disconnected the electrical power line and wound the rope completely onto the drum.
When storing the machine for a long period of time, protect it from weather conditions.
During transport, protect the machine from blows and crushing to avoid compromising its functionality and mechanical strength.

11. SCRAPPING

In the event of scrapping, proceed as follows:

a) drain off all oil by means of the relative plug.

b) Separate all plastic and electrical components (cables, pendant control etc.)

c) Divide all metal components according to type (steel, aluminium etc.)

On completion of the above, dispose of all components at authorised waste disposal centres in compliance with current legislation.

⚠ **Respect the environment; certain parts can be harmful to persons or to the environment.**

12. TROUBLESHOOTING

FAULT	CAUSE	SOLUTION
The machine does not lift or lower on command	Emergency stop button engaged	Turn to disengage
	No power to machine	Check mains cable
	Plug not inserted	Plug in
	Power board cutout tripped	Reset the switch
Sliding not smooth on gantry rails	Frame wheels lubrication insufficient	Lubrificate wheels
IF THE FAULT PERSISTS		Contact IMER Technical Service

13. PROCEDURE IN CASE OF FAULT WITH LOAD SUSPENDED

- If possible remove the load from the nearest level, then dismount the winch and service it.
- If this is not possible, use another lifting machine (with adequate load capacity) from higher up and suspend the faulty winch both at the load and at the winch attachment point.

Lift the faulty winch slowly off its fitting, then lower the entire load to the ground.

- DO NOT adjust the motor brake with the load suspended as it would be uncontrollable.
- DO NOT try to service the machine with the load suspended.

14. NOISE LEVEL AT THE OPERATOR'S EAR

The level Lp(A) given in the TECHNICAL DATA chart corresponds to the weighted equivalent sound pressure level on scale A of European Directive 2006/42/EC. This level is measured with no load, at the operator's head in the working position 1.5 metres away from the instrument, considering the different working conditions.

IMER INTERNATIONAL S.p.A.

ET 300

SCHEMA ELETTRICO - SCHÉMA ÉLECTRIQUE - WIRING DIAGRAM - SCHALTAPLAN - ESQUEMA ELECTRICO

(COD. 1140951)

TELECOMANDO (FIG. 7)

L1	CONDUTTORE DI LINEA
N	CONDUTTORE DI LINEA NEUTRO
PE	CONDUTTORE DI PROTEZIONE
T1	TRASFORMATORE
X1	CONNETTORE CONDENSATORE
X2	MORSETTIERA
F2	FUSIBILE TRASF. INGRESSO)
F3	FUSIBILE TRASF. (USCITA)
K1	RELE' ARRESTO
K2	RELE' DISCESA
K3	RELE' SALITA
S1	PULSANTE ARRESTO
S2	PULSANTE DISCESA
S3	PULSANTE SALITA
S5	FINECORSA DI DISCESA
C1	CONDENSATORE

TELECOMMANDE (FIG.7)

L1	CONDUCTEUR DE LIGNE PHASE
N	CONDUCTEUR DE LIGNE NEUTRE
PE	CONDUCTEUR DE PROTECTION
T1	TRANSFORMATEUR
X1	CONNECTEUR
X2	BORNIER TABLEAU
F2	FUSIBLE TRANSF
F3	FUSIBLE AUX. TRANSF
K1	CONTACTEUR ARRETE
K2	CONTACTEUR MONTEE
K3	CONTACTEUR DESCENTE
S1	BOUTON-POUSSOIR ARRETE
S2	BOUTON-POUSSOIR MONTEE
S3	BOUTON-POUSSOIR DESCENTE
S5	FIN DE COURSE DESCENTE
C1	CONDENSATEUR

REMOTE CONTROL (FIG. 7)

L1	LIVE WIRE
N	NEUTRAL WIRE
PE	EARTH WIRE
T1	TRANSFORMER
X1	CONTROL CONNECTOR
X2	SWITCHBOARD TERMINALS
F2	TRANSFORMER FUSE
F3	AUXILIARY TRANSFORMER FUSE
K1	STOP CONTACTOR
K2	UP CONTACTOR
K3	DOWN CONTACTOR
S1	STOP BUTTON
S2	UP BUTTON
S3	DOWN BUTTON
S5	DOWNSTROKE LIMIT SWITCH
C1	CAPACITOR

FERNSTEUERUNG (FIG. 7)

L1	PHASENLEITER
N	MITTELLEITER
PE	SCHUTZLEITER
T1	TRAFO
X1	VERBINDER SCHALTELEMENTE
X2	KLEMMBRETTSCHALTER
F2	SICHERUNG TRAFO
F3	SICHERUNG TRAFO
K1	STOP-RELAIS
K2	KONTAKTGEBER HEBEN
K3	KONTAKTGEBER SENKEN
S1	STOPSCHALTER
S2	DRUCKSCHALTER HEBEN
S3	DRUCKSCHALTER SENKEN
S5	ENDESCHALTER SENKEN
C1	KONDENSATOR

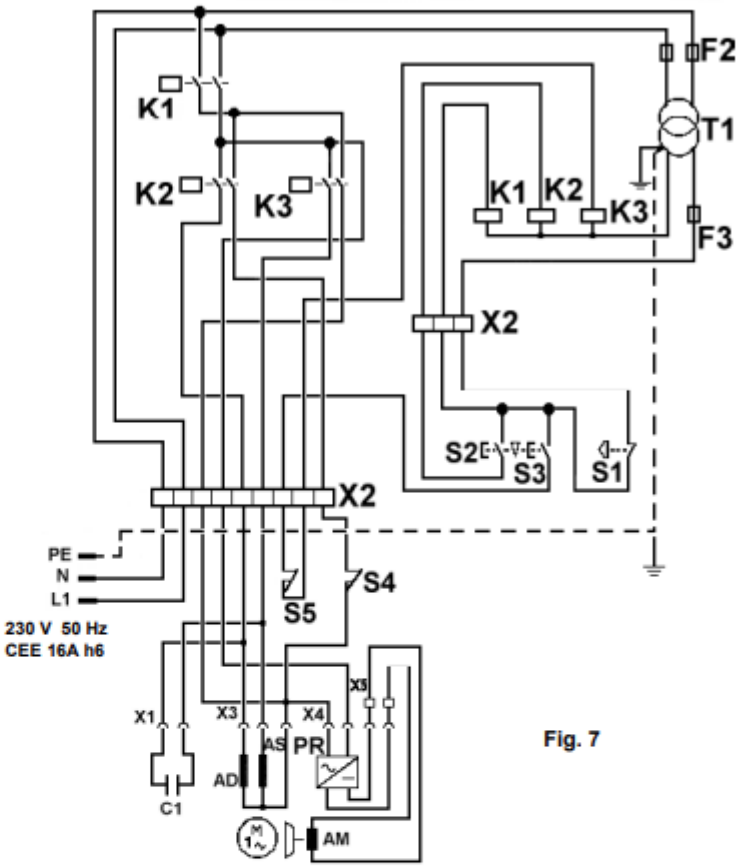

Fig. 7

TELEMANDO (FIG. 7)

L1	CONDUCTOR DE LINEA FASE
N	CONDUCTOR DE LINEA NEUTRO
PE	CONDUCTOR DE PROTECCIÓN
T1	TRANSFORMADOR
X1	CONECTOR DE MANDOS
X2	BORNERA DEL CUADRO
F2	FUSIBLE TRANSF.
F3	FUSIBLE AUX, TRANSF
K1	RELÉ DE PARADA
K2	CONTACTOR DE SUBIDA
K3	CONTACTOR DE BAJADA
S1	BOTÓN DE PARADA
S2	BOTÓN DE SUBIDA
S3	SOTON DE BAJADA
S5	FINAL DE CARRERA BAJADA
C1	CONDENSATOR

IMER INTERNATIONAL S.p.A.

ET 300

Fig. 8

STRUTTURA DI SUPPORTO A CAVALLETTO IMER (PORTATA MAX 300 kg)
CHEVALET DE SUPPORT IMER (PORTÉE MAXI 300 kg)
IMER GANTRY HOIST (MAX LOAD CAPACITY 300 kg)
BRÜCKENSEILZUGSTRUKTUR IMER (MAX. TRAGFÄHIGKEIT 300 kg)
ESTRUCTURA DE SOPORTE CON CABALLETE IMER (CAPACIDAD MÁX 300 kg)

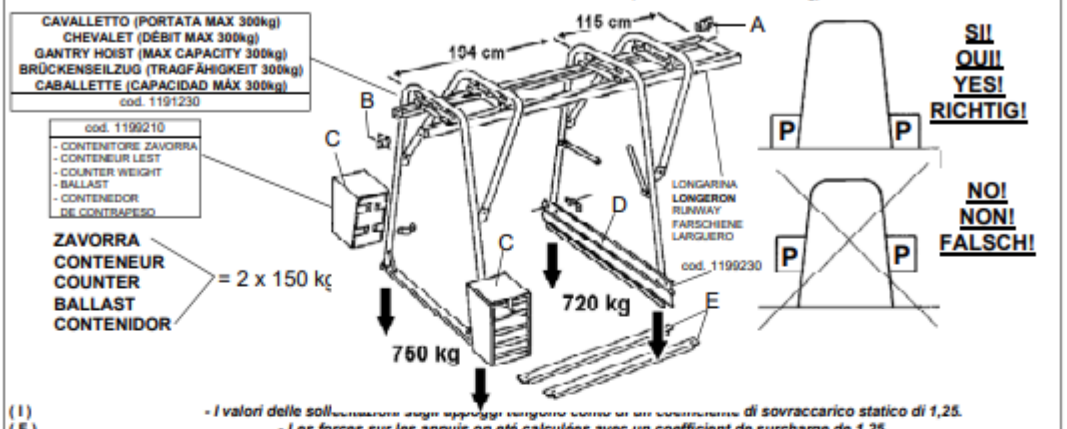

(I) - I valori delle sollecitazioni sugli appoggi tengono conto di un coefficiente di sovraccarico statico di 1,25.
(F) - Les forces sur les appuis on eté calculées avec un coefficient de surcharge de 1,25.
(GB) - The forces on the links are evaluated considering a overload coefficient of 1,25.
(D) - Die Belastungswerte auf den Trägern gehen vov einem statischen Überlastungskoeffizienten von 1,25 aus.
(E) - Los valores de las solicitaciones en los apoyos tienen en cuenta un coeficiente de sobrecarga estática de 1,25.

Fig. 9

PUNTI DI VISIBILE APPIATTIMENTO POINTS D' APLATISSAGE VISIBLE VISIBLE FLATTENED POINTS SCHLAUFENDIBILDUNG PUNTOS DE ACHATAMIENTO EVIDENTE	
CORROSIONE INTERNA O ESTERNA CORROSION INTERIEURE OU EXTERIEURE INTERNAL OR EXTERNAL CORROSION ABFLACHUNGEN ODER AUFWÖLBUNGEN CORROSION INTERNA O EXTERNA	
ROTTURA DI UN TREFOLO RUPTURE D' UN BRIN BREAKING OF ONE STRAND BRECHEN EINZELNER DRÄHTE ROTURA DE UN RAMAL	
ROTTURA DI SINGOLI FILI RUPTURE DE FILS BREAKING OF SINGLE WIRES FEHLEN EINER LITZE ROTURA DE HILOS	
FORMAZIONE DI ANSE FORMATION DE BOUCLES LOOPS VERSCHLEIß=MATERIALVERLUST UNREGELMÄSSIGE OBERFLÄCHE FORMACION DE CURVAS	

(I) **RICAMBI** Per tutti gli ordini dei pezzi di ricambio vogliate indicare: 1 - Tipo di macchina.2 - Numero di codice e di riferimento collocato in corrispondenza di ogni definizione.3 - Numero di serie e anno di costruzione riportato sulla targhetta della macchina. SIMBOLOGIA Intercambiabilità (esempio): Fino alla macchina matricola N° 5240 è stato installato il rif.1 cod.3204530,dalla macchina matricola N° 5241 è stato installato il rif.1.1 cod.3204520.Il rif.1.1 è intercambiabile ( ) con il rif.1.Non sono intercambiabili i rif.1 e rif.1.1 se in tabella è presente il simbolo ( ).

(F) **PIECES DE RECHANGE** Pour toutes les commandes de pièces de rechange, veuillez indiquer: 1 - Le Type de machine.2 - Le Numéro de code et de référence se trouvant en face de chaque définition.3 - Le Numéro de série et l'année de construction se trouvant sur la plaquette d'identification de la machine SYMBOL Interchangeabilité (exemple): Jusqu'à la machine matricule N° 5240, nous avons installé la réf. 1 code 3204530; à partir de la machine matricule N° 5241, nous avons installé la réf. 1.1 code 3204520.La réf. 1.1 est interchangeable ( ) avec la réf.1.Les réf. 1 et réf. 1.1 ne sont pas interchangeables si le symbole ( ) n'est pas sur le tableau.

(GB) **SPARE PARTS** All orders for spare parts must indicate the following: 1 - Type of machine.2 - Part number and position number of each part.3 - Serial number and year of manufacture reported on the machine's identification plate. SYMBOL Interchangeability (example): Pos. 1.1 is interchangeable ( ) with Pos. 1.Pos. 1 and Pos. 1.1 are not interchangeable if the ( ) symbol appears in the table.

*(D) **ERSATZTEILE** Für Ersatzteilbestellungen bitte die folgenden Angaben machen: 1) Maschinentyp 2) Jeweils zugeordnete Art.-Nr. und Positionsnummer 3) Seriennummer und Baujahr (Angabe auf dem Maschinenschild) **SYMBOLE**Austauschbarkeit (Beispie()):Bis zur Maschinenummer 5240 ist Ref. 1 Cod. 3204530 und ab Maschinennummer 5241 ist Ref. 1.1 Cod. 3204520 installiert worden. Ref. 1.1 und Ref. 1 sind austaschbar ( ). Ref. 1 und Ref.1.1 sind nicht austauschbar, wenn das Symbol ( ) angegeben ist.*

(E) **PIEZAS DE RECAMBIO** Para solicitar las piezas de recambio, rogamos indiquen: 1-Tipo de máquina.2-Número de referencia y código situados en correspondencia de cada definición.3-Número de serie y año de fabricación indicados en la placa de la máquina. SIMBOLOGIA Intercambiabilidad (ejemplo): Hasta el equipo con matricula N° 5240, se ha instalado la pieza con ref. 1 y cód. 3204530; a partir de la máquina con matricula N° 5241, se ha instalado la pieza con ref. 1.1 y cód. 3204520. La pieza con ref. 1.1 se puede intercambiar ( ) con la pieza con ref. 1.Si en tabla se halla presente el simbolo ( ), las piezas co referencia 1 y 1.1 no son intercabiables.

Rif.	Cod.	I	F	GB	D	E	Note
1	3204530	Riduttore	Réducteur	Reducer	Untersetzungsgetriebe	Reductor	5240
2	3204520	Riduttore	Réducteur	Reducer	Untersetzungsgetriebe	Reductor	5241

IMER INTERNATIONAL S.p.A.

ET 300

TAV. 2		I	F	GB	D	E	ET 300 1140950
RIF.	COD.	ELEVATORE	ELEVATEUR	HOIST	WINDE	ELEVADOR	NOTE
1	3213578	TELAIO	CHâSSIS	FRAME	GESTELL	BASTIDOR	
2	2201723	ALBERO TAMBURO	ARBRE TAMBOUR	DRUM SHAFT	TROMMELWELLE	EJE DE TAMBOR	
3	2204550	CUSCINETTO	PALIER	BEARING	LAGER	COJINETE	6205
4	2203155	SUPPORTO TAMBURO	SUPPORT TAMBOUR	DRUM SUPPORT	TROMMELLAGER	SOPORTE DE TAMBOR	
5	2261356	TAMBURO	TAMBOUR	DRUM	TROMMEL	TAMBOR	
6	2260002	LEVA FINECORSA SALITA	LEVIER DE FIN DE COURSE	LIMIT LEVER	HEBEL	PALANCA FINAL DE CARRERA	
7	2214242	CONTRAPPESO	CONTREPOIDS	CABLE WEIGHT	GEGENGEWICHT	CONTRAPESO	
8	2212325	FUNE ACCIAIO	CâBLE EN ACIER	WIRE ROPE	STAHLSEIL	CABLE DE ACERO	
9	2239400	MORSETTO	BORNE	CLAMP	KLEMME	BORNE	
10	2206002	BOZZELLO A CUNEO	CÔNE POUR CâBLE	WEDGE BLOCK	SEILBLOK	GARRUCHA EN FORMA DE CUÑA	
11	2213267	GANCIO	CROCHET	HOOK	ZUGHAKEN	GANCHO	
12	2229400	LINGUETTA	LANGUETTE	KEY	FEDER	LENGüETA	6604 8X7X30
13	2207355	ANELLO PARAOLIO	BAGUE D'ÉTANCHÉITÉ	OIL SEAL RING	ÖLABDICHTUNG	ANILLO DE RETIN	52x25x7
15	2237299	DISTANZIALE	ENTRETOISE	SPACER	DISTANZRING	SEPARADOR	
16	2202568	INGRANAGGIO	ENGRENAGE	GEAR	ZAHNRAD	ENGRANAJE	Z76 M2
17	2227280	ANELLO ARRESTO	BAGUE D'ARRêT	CIRCLIP	ARRETIERRING	ANILLO DE PARADA	743S E/25
18	2229450	LINGUETTA	LANGUETTE	KEY	FEDER	LENGüETA	8x7x20
19	2235420	LIVELLO OLIO	NIVEAU HUILE	OIL LEVEL PLUG	SCHAUGLAS	NIVEL ACEITE	
20	2202567	INGRANAGGIO	ENGRENAGE	GEAR	ZAHNRAD	ENGRANAJE	Z76 M1.75
21	3213481	INGRANAGGIO	ENGRENAGE	GEAR	ZAHNRAD	ENGRANAJE	Z26 M2
22	2201130	ALBERO PIGNONE	ARBRE PIGNON	PINION SHAFT	RITZELWELLE	EJE DEL PIñóN	
23	2229327	LINGUETTA	LANGUETTE	KEY	FEDER	LENGüETA	6x6x40
24	2204440	CUSCINETTO	PALIER	BEARING	LAGER	COJINETE	6004
25	2236555	FLANGIA RIDUTTORE	BRIDE RÉDUCTEUR	REDUCTION GEAR FLANGE	FLANSCH	BRIDA DEL REDUCTOR	
26	2215165	CARCASSA RIDUTTORE	CARCASSE RÉDUCTEUR	REDUCTION GEAR CASING	GETRIEBEGEHäUSE	CARCASA DEL REDUCTOR	
27	3213484	TARGA MOTORE	PLAQUETTE	RATING PLATE	SCHILDERKIT	CHAPA DE MATRICULA	
28	2204391	CUSCINETTO	PALIER	BEARING	LAGER	COJINETE	6205 2z
29	3213478	ROTORE	ROTOR	ROTOR	LäUFER	ROTOR	
30	3213580	MOTORE ELETTRICO	MOTEUR	ELECTRIC MOTOR	KOMPLETTER MOTOR	MOTOR	
31	3213581	LEVA FRENO	LEVIER FREIN	BRAKE LEVER	HEBEL	PALANCA FRENO	
32	2231507	MOLLA FRENO	RESSORT	SPRING	FEDER	MUELLE	
33	2253871	PISTONE FRENO	FREIN	BRAKE	BREMSE	FRENO	
34	2211600	RUOTINA	ROUE	WHEEL	RAD	RUEDA	
35	2222099	VITE	VIS	SCREW	SCHRAUBE	TORNILLO	5737 M10x40
36	2204482	CUSCINETTO	PALIER	BEARING	LAGER	COJINETE	6203
37	2224355	ROSETTA ELASTICA	RONDELLE ELASTIQUE	SPRING WASHER	UNTERLEGSCHEIBE	ARANDELA ELáSTICA	6798A Ø 10
39	2223650	DADO	ECROU	NUT	MUTTER	TUERCA	5588 M10
43	2222460	VITE	VIS	SCREW	SCHRAUBE	TORNILLO	M4x12
44	2288791	RIVETTO	RIVET	RIVET	ALIUNET	REMACHE	
45	3213583	TARGA ELEVATORE	PLAQUETTE	RATING PLATE	SCHILDERKIT	CHAPA DE MATRICULA	
46	3213015	PULSANTIERA	BOITE À BOUTONS	CONTROL BOARD	STEUERSCHALTER	BOTONERA	
47	3203503	SPINA A PARETE	FICHE D'ÉTANCHÉITÉ	ELECTRIC CONNECTOR	STECKER	ENCHUFE DE PARED	V230 IP67
48	2285306	CONDENSATORE	CONDENSATEUR	CAPACITOR	KONDENSATOR	CONDENSADOR	45 µF, 450 V
49	3203922	CASSETTA ELETTRICA	BOITIER ÉLECTRIQUE	JUNCTION BOX	GEHäUSE	CAJA ELICTRICA	
51	3200005	MICROINTERRUTTORE	FIN DE COURSE MONTEE	UP LIMIT SWITCH	ENDSCHALTER SENKEN	FINAL DE CARRERA SUBIDA	
53	2223920	DADO AUTOBLOCCANTE	ECROU DE SURETE	SELF LOCKING NUT	SELBSTSICHERNDE MUTTER	TUERCA AUTOBLOQUEANTE	M.10
54	3213053	RADDRIZZATORE FRENO	ELECTRO-AIMANT FREIN	BRAKE RECTIFIER	BREMSENSPESEGERäT	RECTIFICADOR FRENO	
55	2287145	ELETTROMAGNETE FRENO	ELECTRO-AIMANT FREIN	BRAKE ELECTROMAGNET	BREMSMAGNET	ELECTROMAGNETO FRENO	
56	2287136	DISCO FRENO	DISQUE FREIN	BRAKE DISK	BREMSSCHEIBE	DISCO FRENO	
57	2291458	VENTOLA MOTORE	VENTILATEUR MOTEUR	MOTOR FAN	LüFTER	VENTILADOR DEL MOTOR	
58	2291246	COPRIVENTOLA	CACHE-VENTILATEUR	FAN COVER	LüFTERVERKLEIDUNG	CUBIERTA DE VENTILADOR	
59	2223922	DADO	ECROU	NUT	MUTTER	TUERCA	Autobl.MB12
61	2223705	DADO	ECROU	NUT	MUTTER	TUERCA	M 12
62	2275092	COPERCHIO SCATOLA ELETTRICA	COUVERCLE BOITIER ELECTRIQUE	CONTROL BOX COVER	KASTENDECKEL	CUBIERTA DE CAJA ELÉCTRICA	
63	2287124	MOLLA	RESSORT	SPRING	FEDER	MUELLE	
65	2204452	CUSCINETTO	PALIER	BEARING	LAGER	COJINETE	6005 2Z
66	2231215	MOLLA A TAZZA	BAGUE ELASTIQUE	SPLIT RING	FEDER	MUELLE	
67	2237340	ANELLO ELASTICO	BAGUE ELASTIQUE	THRUST WASHER	AUSGLEICHRING	ANILLO ELÁSTICO	
68	3213584	CARCASSA E STATORE	CARCASSE DU STATOR	MOTOR STATOR	STäNDER	CARCASA Y ESTATOR	
69	2291480	COPERCHIO MOTORE	COUVERCLE MOTEUR	MOTOR COVER	MOTORDECKEL	CUBIERTA DE MOTOR	
70	2216327	GUARNIZIONE	JOINT	GASKET	DICHTUNG	JUNTA	

IMER INTERNATIONAL S.p.A.

ET 300

TAV. 2		I	F	GB	D	E	ET 300 1140950
RIF.	COD.	ELEVATORE	ELEVATEUR	HOIST	WINDE	ELEVADOR	NOTE
71	2216331	GUARNIZIONE	JOINT	GASKET	DICHTUNG	JUNTA	
72	2227700	ANELLO ARRESTO	BAGUE D'ARRêT	CIRCLIP	ARRETIERRING	ANILLO DE PARADA	7437 I/52
73	2289559	FRENO A DISCO	FREIN (DISQUE	DISK BRAKE ASSEMBLY	SCHEIBENBREMSE	FRENO DE DISCO	
74	2235461	TAPPO OLIO	BOUCHON HUILE	OIL PLUG	ÖLSTOPFEN	TAPON ACEITE	
75	3203565	GUARNIZIONE	JOINT	GASKET	DICHTUNG	JUNTA	
76	2237301	DISTANZIALE	ENTRETOISE	SPACER	DISTANZRING	SEPARADOR	
77	2222970	VITE	VIS	SCREW	SCHRAUBE	TORNILLO	M5x160
78	2224206	ROSETTA	RONDELLE	WASHER	UNTERLEGSCHEIBE	ARANDELA	6592 12x36x4
79	2229310	LINGUETTA	LANGUETTE	KEY	FEDER	LENGüETA	6x6x30
80	2222505	VITE	VIS	SCREW	SCHRAUBE	TORNILLO	5931 M5x30
81	2222018	VITE	VIS	SCREW	SCHRAUBE	TORNILLO	5737 M8x35
82	2224140	ROSETTA	RONDELLE	WASHER	UNTERLEGSCHEIBE	ARANDELA	Ø 8x18
83	2224350	ROSETTA ELASTICA	RONDELLE ELASTIQUE	SPRING WASHER	UNTERLEGSCHEIBE	ARANDELA ELáSTICA	6798A Ø 8
84	2223570	DADO	ECROU	NUT	MUTTER	TUERCA	5588 M8
88	2222470	VITE SPECIALE	VIS	SCREW	SCHRAUBE	TORNILLO	
89	2238680	CUNEO PER CAVO	CONE POUR CABLE	WEDGE FOR ROPE	KEGEL FÜR STAHLSEIL	CUÑA PARA CABLE	
90	2231420	MOLLA	RESSORT	SPRING	FEDER	MUELLE	

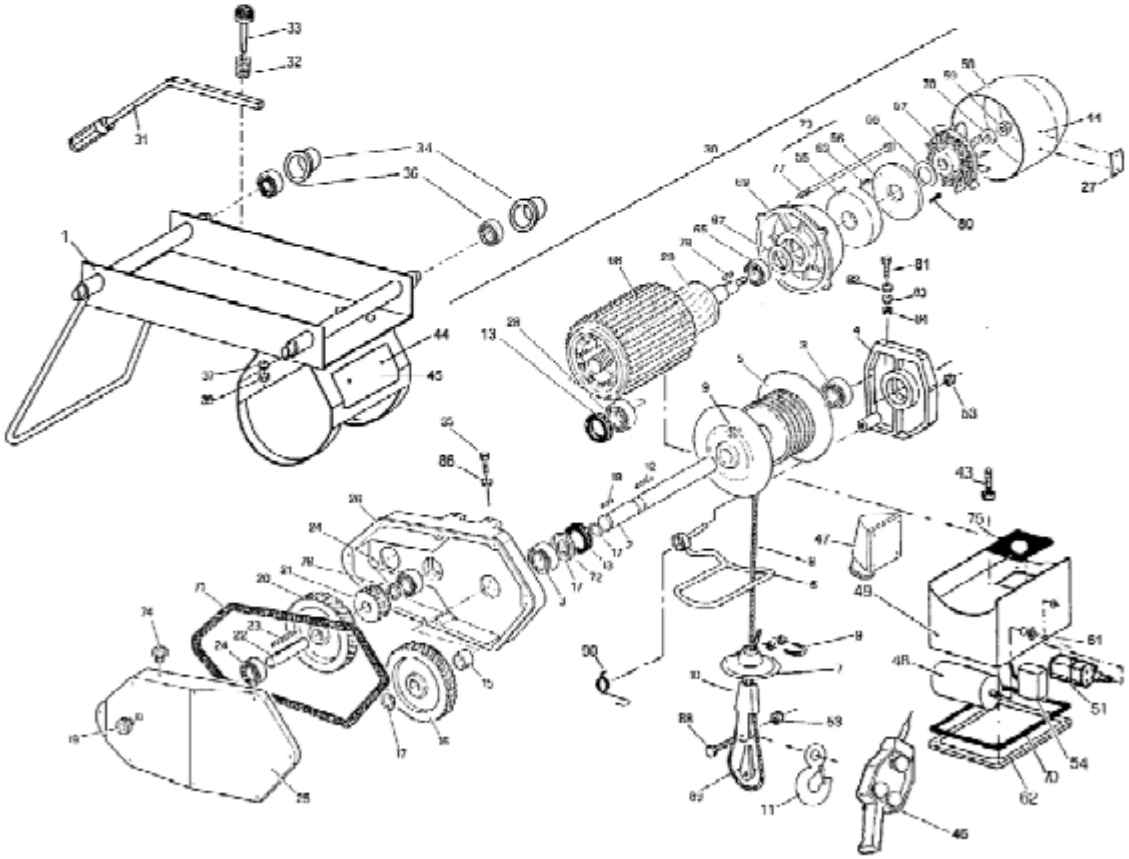

IMER INTERNATIONAL S.p.A.

ET 300

TAV. 2		I	F	GB	D	E	ET 300
							1140951
RIF.	COD.	ELEVATORE	ELEVATEUR	HOIST	WINDE	ELEVADOR	NOTE
1	3213578	TELAIO	CHâSSIS	FRAME	GESTELL	BASTIDOR	
2	2201723	ALBERO TAMBURO	ARBRE TAMBOUR	DRUM SHAFT	TROMMELWELLE	EJE DE TAMBOR	
3	2204550	CUSCINETTO	PALIER	BEARING	LAGER	COJINETE	6205
4	2203155	SUPPORTO TAMBURO	SUPPORT TAMBOUR	DRUM SUPPORT	TROMMELLAGER	SOPORTE DE TAMBOR	
5	2261356	TAMBURO	TAMBOUR	DRUM	TROMMEL	TAMBOR	
6	3203588	LEVA FINECORSA SALITA	LEVIER DE FIN DE COURSE	LIMIT LEVER	HEBEL	PALANCA FINAL DE CARRERA	
7	2214242	CONTRAPPESO	CONTREPOIDS	CABLE WEIGHT	GEGENGEWICHT	CONTRAPESO	
8	2212325	FUNE ACCIAIO	CâBLE EN ACIER	WIRE ROPE	STAHLSEIL	CABLE DE ACERO	
9	2239400	MORSETTO	BORNE	CLAMP	KLEMME	BORNE	
10	2206002	BOZZELLO A CUNEO	CÔNE POUR CâBLE	WEDGE BLOCK	SEILBLOK	GARRUCHA EN FORMA DE CUÑ	
11	2213267	GANCIO	CROCHET	HOOK	ZUGHAKEN	GANCHO	
12	2229400	LINGUETTA	LANGUETTE	KEY	FEDER	LENGüETA	6604 8X7X30
13	2207355	ANELLO PARAOLIO	BAGUE D'ÉTANCHÉITÉ	OIL SEAL RING	ÖLABDICHTUNG	ANILLO DE RETIN	52x25x7
15	2237299	DISTANZIALE	ENTRETOISE	SPACER	DISTANZRING	SEPARADOR	
16	2202568	INGRANAGGIO	ENGRENAGE	GEAR	ZAHNRAD	ENGRANAJE	Z.76 M2
17	2227280	ANELLO ARRESTO	BAGUE D'ARRêT	CIRCLIP	ARRETIERRING	ANILLO DE PARADA	7435 E/25
18	2229450	LINGUETTA	LANGUETTE	KEY	FEDER	LENGüETA	8x7x20
19	2235420	LIVELLO OLIO	NIVEAU HUILE	OIL LEVEL PLUG	SCHAUGLAS	NIVEL ACEITE	
20	2202567	INGRANAGGIO	ENGRENAGE	GEAR	ZAHNRAD	ENGRANAJE	Z.76 M1.75
21	3213481	INGRANAGGIO	ENGRENAGE	GEAR	ZAHNRAD	ENGRANAJE	Z.26 M2
22	2201130	ALBERO PIGNONE	ARBRE PIGNON	PINION SHAFT	RITZELWELLE	EJE DEL PIñóN	
23	2229327	LINGUETTA	LANGUETTE	KEY	FEDER	LENGüETA	6x6x40
24	2204440	CUSCINETTO	PALIER	BEARING	LAGER	COJINETE	6004
25	2236555	FLANGIA RIDUTTORE	BRIDE RÉDUCTEUR	REDUCTION GEAR FLANGE	FLANSCH	BRIDA DEL REDUCTOR	
26	2215165	CARCASSA RIDUTTORE	CARCASSE RÉDUCTEUR	REDUCTION GEAR CASING	GETRIEBEGEHäUSE	CARCASA DEL REDUCTOR	
27	3213484	TARGA MOTORE	PLAQUETTE	RATING PLATE	SCHILDERKIT	CHAPA DE MATRICULA	
28	2204391	CUSCINETTO	PALIER	BEARING	LAGER	COJINETE	6205 2z
29	3213478	ROTORE	ROTOR	ROTOR	LäUFER	ROTOR	
30	3213580	MOTORE ELETTRICO	MOTEUR	ELECTRIC MOTOR	KOMPLETTER MOTOR	MOTOR	
31	3213581	LEVA FRENO	LEVIER FREIN	BRAKE LEVER	HEBEL	PALANCA FRENO	
32	2231507	MOLLA FRENO	RESSORT	SPRING	FEDER	MUELLE	
33	2253871	PISTONE FRENO	FREIN	BRAKE	BREMSE	FRENO	
34	2211600	RUOTINA	ROUE	WHEEL	RAD	RUEDA	
35	2222099	VITE	VIS	SCREW	SCHRAUBE	TORNILLO	5737 M10x40
36	2204482	CUSCINETTO	PALIER	BEARING	LAGER	COJINETE	6203
37	2224355	ROSETTA ELASTICA	RONDELLE ELASTIQUE	SPRING WASHER	UNTERLEGSCHEIBE	ARANDELA ELäSTICA	6798A Ø 10
39	2223650	DADO	ECROU	NUT	MUTTER	TUERCA	5588 M10
43	2222460	VITE	VIS	SCREW	SCHRAUBE	TORNILLO	M4x12
44	2288791	RIVETTO	RIVET	RIVET	ALIUNET	REMACHE	
45	3213583	TARGA ELEVATORE	PLAQUETTE	RATING PLATE	SCHILDERKIT	CHAPA DE MATRICULA	
47	3203503	SPINA A PARETE	FICHE D'ÉTANCHÉITÉ	ELECTRIC CONNECTOR	STECKER	ENCHUFE DE PARED	V230 IP67
48	2285306	CONDENSATORE	CONDENSATEUR	CAPACITOR	KONDENSATOR	CONDENSADOR	45 µF, 450 V
49	3213592	CASSETTA ELETTRICA	BOITIER ÉLECTRIQUE	JUNCTION BOX	GEHäUSE	CAJA ELICTRICA	
51	3200005	FINECORSA SALITA	FIN DE COURSE MONTEE	UP LIMIT SWITCH	ENDSCHALTER SENKEN	FINAL DE CARRERA SUBIDA	
52	2286340	FINECORSA DISCESA	FIN DE COURSE DESCENTE	DOWN LIMIT SWITCH	ENDSCHALTER SENKEN	FINAL DE CARRERA BAJADA	
53	2223920	DADO AUTOBLOCCANTE	ECROU DE SURETE	SELF LOCKING NUT	SELBSTSICHERNDE MUTTER	TUERCA AUTOBLOQUEANTE	M.10
54	3213053	RADDRIZZATORE FRENO	ELECTRO-AIMANT FREIN	BRAKE RECTIFIER	BREMSENSPESEGERÄT	RECTIFICADOR FRENO	
55	2287145	ELETTROMAGNETE FRENO	ELECTRO-AIMANT FREIN	BRAKE ELECTROMAGNET	BREMSMAGNET	ELECTROMAGNETO FRENO	
56	2287136	DISCO FRENO	DISQUE FREIN	BRAKE DISK	BREMSSCHEIBE	DISCO FRENO	
57	2291458	VENTOLA MOTORE	VENTILATEUR MOTEUR	MOTOR FAN	LüFTER	VENTILADOR DEL MOTOR	
58	2291246	COPRIVENTOLA	CACHE-VENTILATEUR	FAN COVER	LüFTERVERKLEIDUNG	CUBIERTA DE VENTILADOR	
59	2223922	DADO	ECROU	NUT	MUTTER	TUERCA	Autobl.MB12
60	2223923	DADO AUTOBLOCCANTE	ECROU DE SURETE	SELF LOCKING NUT	SELBSTSICHERNDE MUTTER	TUERCA AUTOBLOQUEANTE	M.8
61	2223705	DADO	ECROU	NUT	MUTTER	TUERCA	M 12
62	2275092	COPERCHIO SCATOLA ELETTRICA	COUVERCLE BOITIER ELECTRIQUE	CONTROL BOX COVER	KASTENDECKEL	CUBIERTA DE CAJA ELÉCTRICA	
63	2287124	MOLLA	RESSORT	SPRING	FEDER	MUELLE	
65	2204452	CUSCINETTO	PALIER	BEARING	LAGER	COJINETE	6005 2Z
66	2231215	MOLLA A TAZZA	BAGUE ELASTIQUE	SPLIT RING	FEDER	MUELLE	
67	2237340	ANELLO ELASTICO	BAGUE ELASTIQUE	THRUST WASHER	AUSGLEICHRING	ANILLO ELÁSTICO	
68	3213584	CARCASSA E STATORE	CARCASSE DU STATOR	MOTOR STATOR	STäNDER	CARCASA Y ESTATOR	
69	2291480	COPERCHIO MOTORE	COUVERCLE MOTEUR	MOTOR COVER	MOTORDECKEL	CUBIERTA DE MOTOR	
70	2216327	GUARNIZIONE	JOINT	GASKET	DICHTUNG	JUNTA	
71	2216331	GUARNIZIONE	JOINT	GASKET	DICHTUNG	JUNTA	
72	2227700	ANELLO ARRESTO	BAGUE D'ARRêT	CIRCLIP	ARRETIERRING	ANILLO DE PARADA	7437 I/52
73	2289559	FRENO A DISCO	FREIN (DISQUE	DISK BRAKE ASSEMBLY	SCHEIBENBREMSE	FRENO DE DISCO	
74	2235461	TAPPO OLIO	BOUCHON HUILE	OIL PLUG	ÖLSTOPFEN	TAPON ACEITE	
75	3203565	GUARNIZIONE	JOINT	GASKET	DICHTUNG	JUNTA	
76	2237301	DISTANZIALE	ENTRETOISE	SPACER	DISTANZRING	SEPARADOR	
77	2222970	VITE	VIS	SCREW	SCHRAUBE	TORNILLO	M5x160
78	2224206	ROSETTA	RONDELLE	WASHER	UNTERLEGSCHEIBE	ARANDELA	6592 12x36x4
79	2229310	LINGUETTA	LANGUETTE	KEY	FEDER	LENGüETA	6x6x30

IMER INTERNATIONAL S.p.A.

ET 300

TAV. 2		I	F	GB	D	E	ET 300
							1140951
RIF.	COD.	ELEVATORE	ELEVATEUR	HOIST	WINDE	ELEVADOR	NOTE
80	2222505	VITE	VIS	SCREW	SCHRAUBE	TORNILLO	5931 M5x30
81	2222018	VITE	VIS	SCREW	SCHRAUBE	TORNILLO	5737 M8x35
82	2224140	ROSETTA	RONDELLE	WASHER	UNTERLEGSCHEIBE	ARANDELA	Ø 8x18
83	2224350	ROSETTA ELASTICA	RONDELLE ILASTIQUE	SPRING WASHER	UNTERLEGSCHEIBE	ARANDELA ELáSTICA	6798A Ø 8
84	2223570	DADO	ECROU	NUT	MUTTER	TUERCA	5588 M8
86	3203589	LEVA FINECORSA DISCESA	LEVIER DE FIN DE COURSE	DOWN POSITION CONTROL LEVER	HEBEL	PALANCA FINAL DE CARRERA	6592 Ø10x20
88	2222470	VITE SPECIALE	VIS	SCREW	SCHRAUBE	TORNILLO	
89	2238680	CUNEO PER CAVO	CONE POUR CABLE	WEDGE FOR ROPE	KEGEL FÜR STAHLSEIL	CUÑA PARA CABLE	
90	3203587	MOLLA	RESSORT	SPRING	FEDER	MUELLE	
100	3213593	SUPPORTO TELECOM.	PLAQUE TÉLÉCOMM.	PLATE	PLATTE	PLACE DE TELECOM.	
105	3203596	FUSIBILE	FUSIBLE	FUSE	SICHERUNG	FUSIBLE	5x10 1A
106	3203597	PORTAFUSIBILE	PORTEFUSIBLE	TERMINAL	POLKLEMME	BORNE	
112	3203998	TRASFORMATORE	TRANSFORMATEUR	TRANSFORMER	TRANSFORMATOR	TRANSFORMADOR	
113	3203999	RELE'	RELAIS	RELAY	RELAIS	RELÉ	
114	3203997	CASSETTA ELETTRICA	BOITIER ÉLECTRIQUE	JUNCTION BOX	GEHäUSE	CAJA ELÉCTRICA	
115	3213002	PULSANTIERA	BOITE À BOUTONS	CONTROL BOARD	STEUERSCHALTER	BOTONERA	

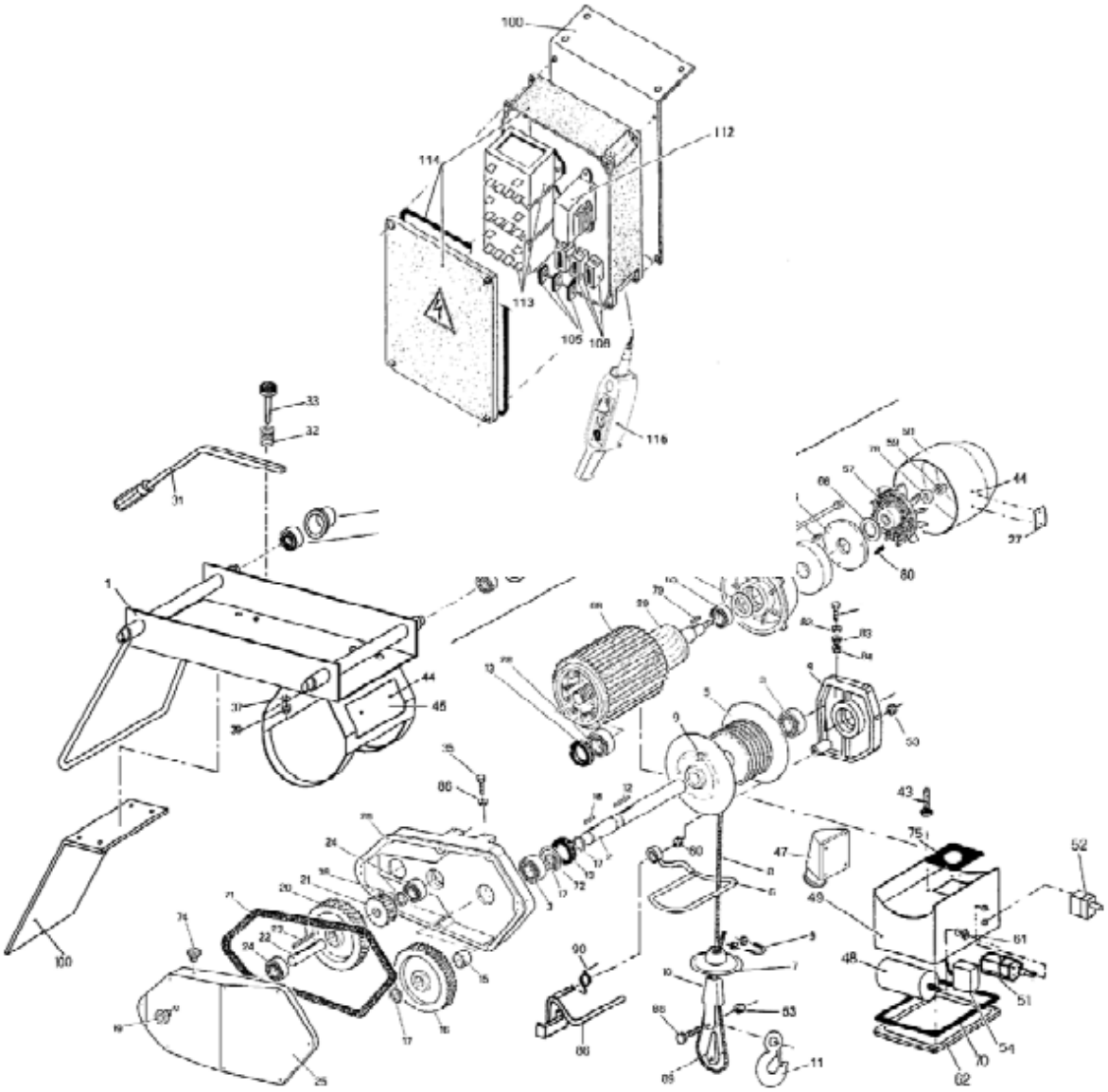

IMER INTERNATIONAL S.p.A.

ET 300

TAV. 2		I	F	GB	D	E	ET 300
							1140951
RIF.	COD.	ELEVATORE	ELEVATEUR	HOIST	WINDE	ELEVADOR	NOTE
80	2222505	VITE	VIS	SCREW	SCHRAUBE	TORNILLO	5931 M5x30
81	2222018	VITE	VIS	SCREW	SCHRAUBE	TORNILLO	5737 M8x35
82	2224140	ROSETTA	RONDELLE	WASHER	UNTERLEGSCHEIBE	ARANDELA	Ø 8x18
83	2224350	ROSETTA ELASTICA	RONDELLE ILASTIQUE	SPRING WASHER	UNTERLEGSCHEIBE	ARANDELA ELáSTICA	6798A Ø 8
84	2223570	DADO	ECROU	NUT	MUTTER	TUERCA	5588 M8
86	3203589	LEVA FINECORSA DISCESA	LEVIER DE FIN DE COURSE	DOWN POSITION CONTROL LEVER	HEBEL	PALANCA FINAL DE CARRERA	6592 Ø10x20
88	2222470	VITE SPECIALE	VIS	SCREW	SCHRAUBE	TORNILLO	
89	2238680	CUNEO PER CAVO	CONE POUR CABLE	WEDGE FOR ROPE	KEGEL FÜR STAHLSEIL	CUÑA PARA CABLE	
90	3203587	MOLLA	RESSORT	SPRING	FEDER	MUELLE	
100	3213593	SUPPORTO TELECOM.	PLAQUE TÉLÉCOMM.	PLATE	PLATTE	PLACE DE TELECOM.	
105	3203596	FUSIBILE	FUSIBLE	FUSE	SICHERUNG	FUSIBLE	5x10 1A
106	3203597	PORTAFUSIBILE	PORTEFUSIBLE	TERMINAL	POLKLEMME	BORNE	
112	3203998	TRASFORMATORE	TRANSFORMATEUR	TRANSFORMER	TRANSFORMATOR	TRANSFORMADOR	
113	3203999	RELE'	RELAIS	RELAY	RELAIS	RELÉ	
114	3203997	CASSETTA ELETTRICA	BOITIER ÉLECTRIQUE	JUNCTION BOX	GEHäUSE	CAJA ELÉCTRICA	
115	3213002	PULSANTIERA	BOITE À BOUTONS	CONTROL BOARD	STEUERSCHALTER	BOTONERA	

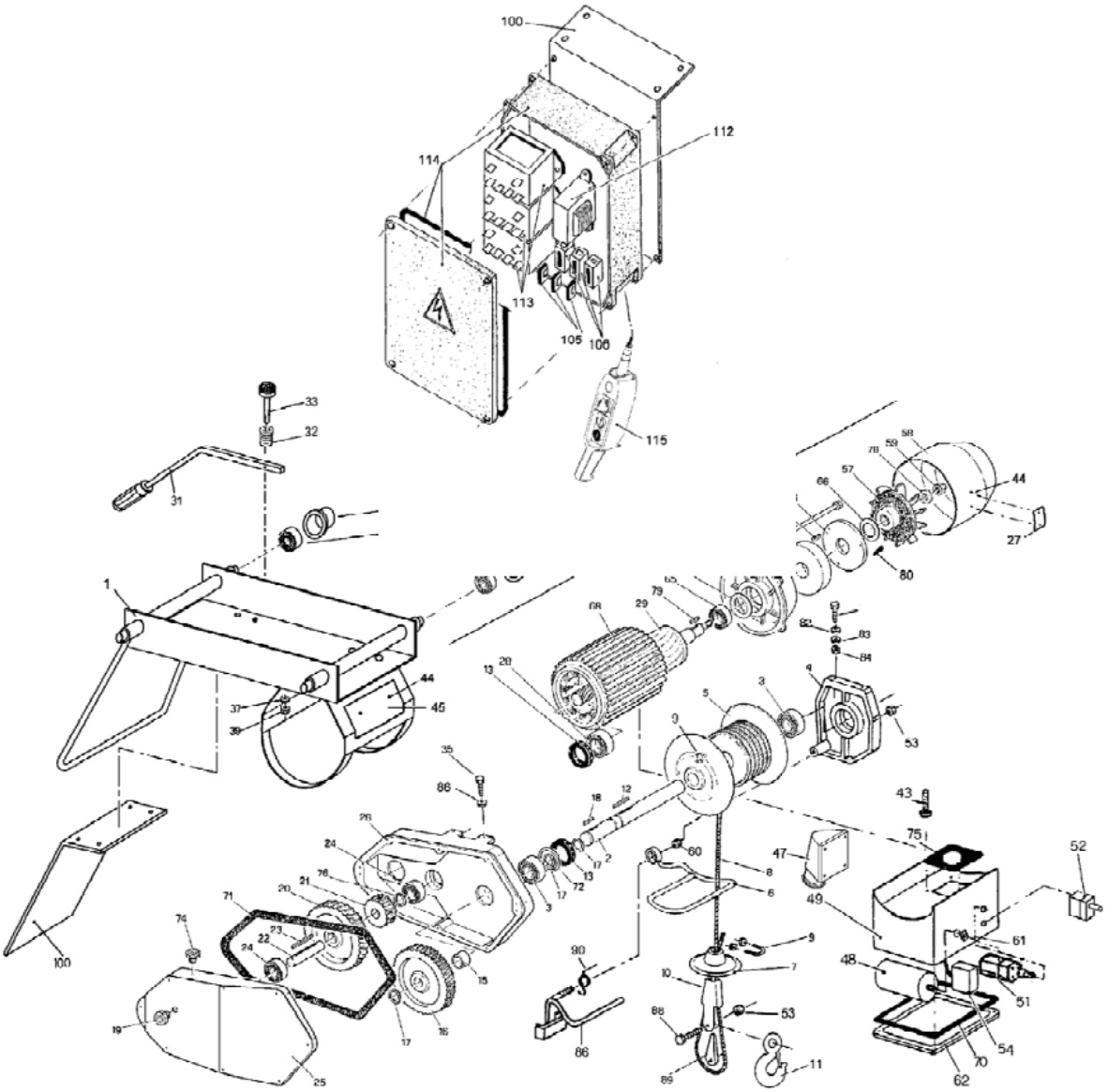

WARRANTY CONDITIONS

The service under terms of warranty has to be required to the closest Authorised Assistance Centre (you can find the list in our sales network or check it on our website www.imergroup.com in the Service area) ; the buyer has to apply for warranty always showing documents about the date of purchase of the item itself.
As warranty we mean reparation or substitution of those spares that have manufacturing defects.
For all the Imer International products, the terms of warranty are one year after the date of delivery to the user.
Reparations done during the warranty period do not interrupt the period of the general warranty itself.
The warranty service include reparation or substitution of all the defective parts; if the reparation is done at the customer's place all the transfer to and from the assistance centre will be charged to the purchaser.
All the reparations under terms of warranty, even if done in one of our authorised assistance centres, have to be approved by Imer International Service department in order to allow the reparations.
The warranty cannot be accepted in the following cases:

- When the reparation or substitution of the parts has been done by a non-authorised Imer assistance service;
- When the cause of the problem is due to the use of non original Imer spare parts;
- When the user install on the machine non original or not indicated on the manual accessories;
- When the product has been, modified, repaired, disassembled from the buyer or from others;
- When there are modifications in the product done without Imer authorisation that can have influence on the correct functioning of the product;
- In case of incorrect start-up, incorrect use of the machine, incorrect use of the instruction given in the operating and maintenance manual, and not execution of the maintenance scheduled procedures;
- In case of natural disasters;
- In case of standard wear and tear;
- In case of damages caused by use of inadequate fuel and lubricant;
- In case of damages to the electrical components caused by an inadequate electrical system, in case of problems given by the electrical alimentation net, or by connections done without following the instruction of the operating and maintenance manual.

For any argument, please address to the place of Jurisdiction of Siena – section of Poggibonsi – Italy.